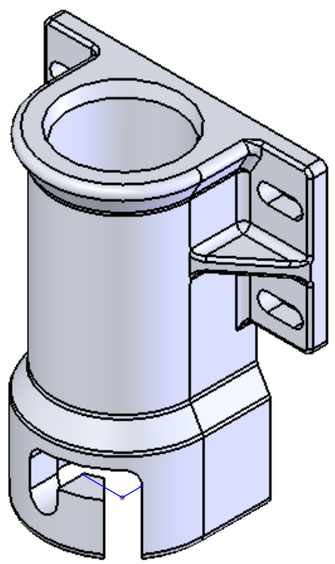

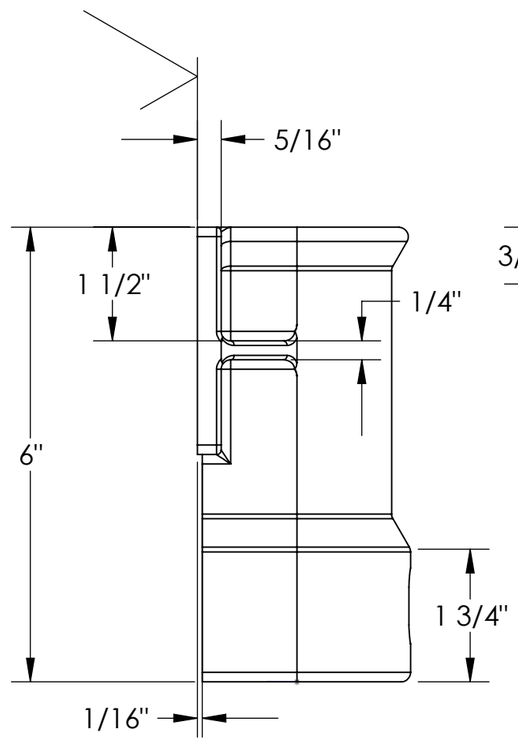

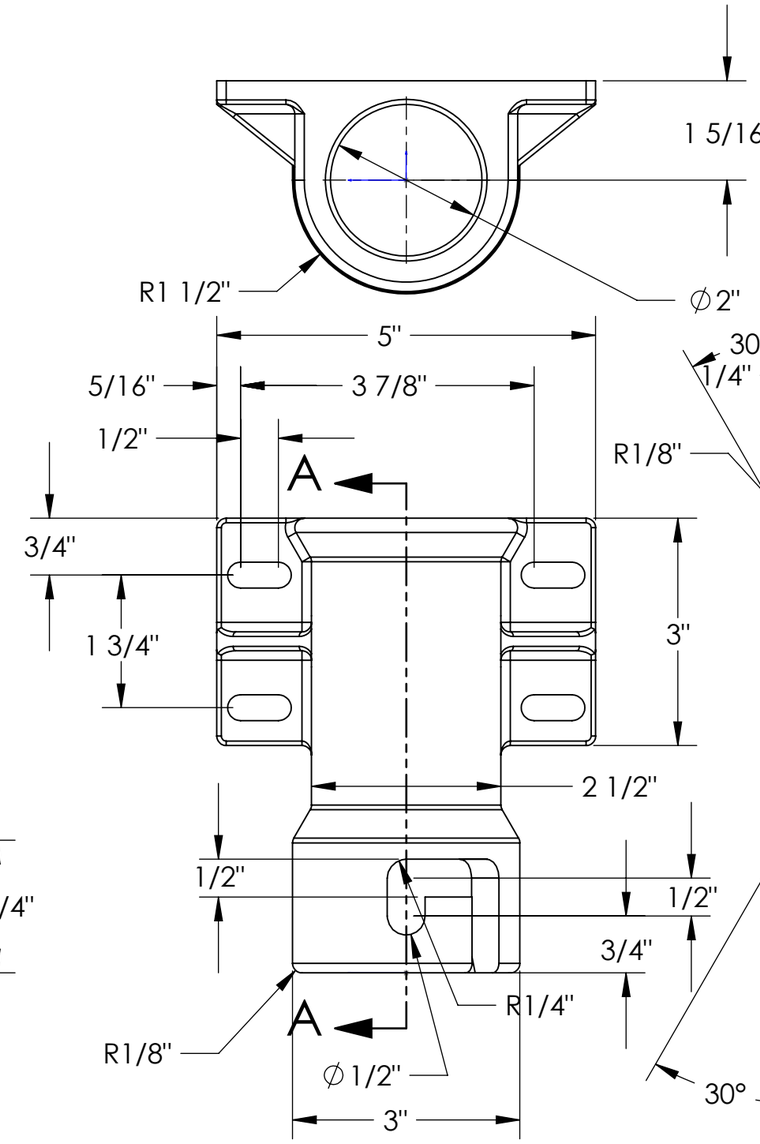

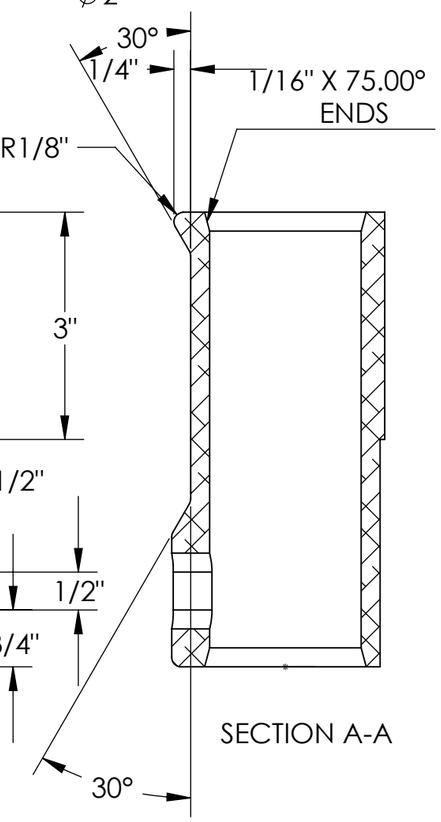

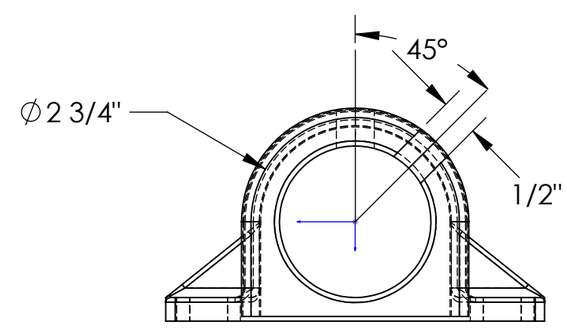

NOTES:
PN: 1000591
DESC: TUBE, SAFETY POST GUIDE, CAST
MATRL: CAST ALUMINUM
EST. WT: 2
FINISH:
NOTE:
CAD FILE: 1000591

THIS DOCUMENT CONTAINS PROPRIETARY, TRADE SECRET INFORMATION THAT IS THE PROPERTY OF VERSA STEEL, INC. THE INFORMATION CONTAINED IN THIS DOCUMENT, INCLUDING THE PRINCIPLE OF DESIGN, MAY NOT BE USED OR COPIED, IN WHOLE OR IN PART, WITHOUT THE EXPRESS PRIOR WRITTEN CONSENT OF VERSA STEEL, INC.

REV	ISSUED FOR	DATE	BY
G			
F			
E			
D			
C			
B			
A			

VERSA STEEL, INC.
1618 NE FIRST AVENUE
PORTLAND, OREGON 97232
(503)287-9822
FAX (503)-287-7483

DRAWN BY: E.BAILIFF
DATE: 2010-2-23
CHECKED BY:
APPROVED BY:

MATERIAL: CAST ALUMINUM
FINISH:
SHEET TITLE: TUBE, SAFETY POST GUIDE, CAST
PART NUMBER: 1000591

PART NUMBER: 1000591
SUPPLIER: HONESTY
SCALE: 1:2
DRAWING NO.: 1000591
REVISION NO.: A
SHEET NO.: 1 OF 1